The Engine House and Wheel House at Brookwood Mine, Buckfastleigh, Devon

a survey of the standing structures

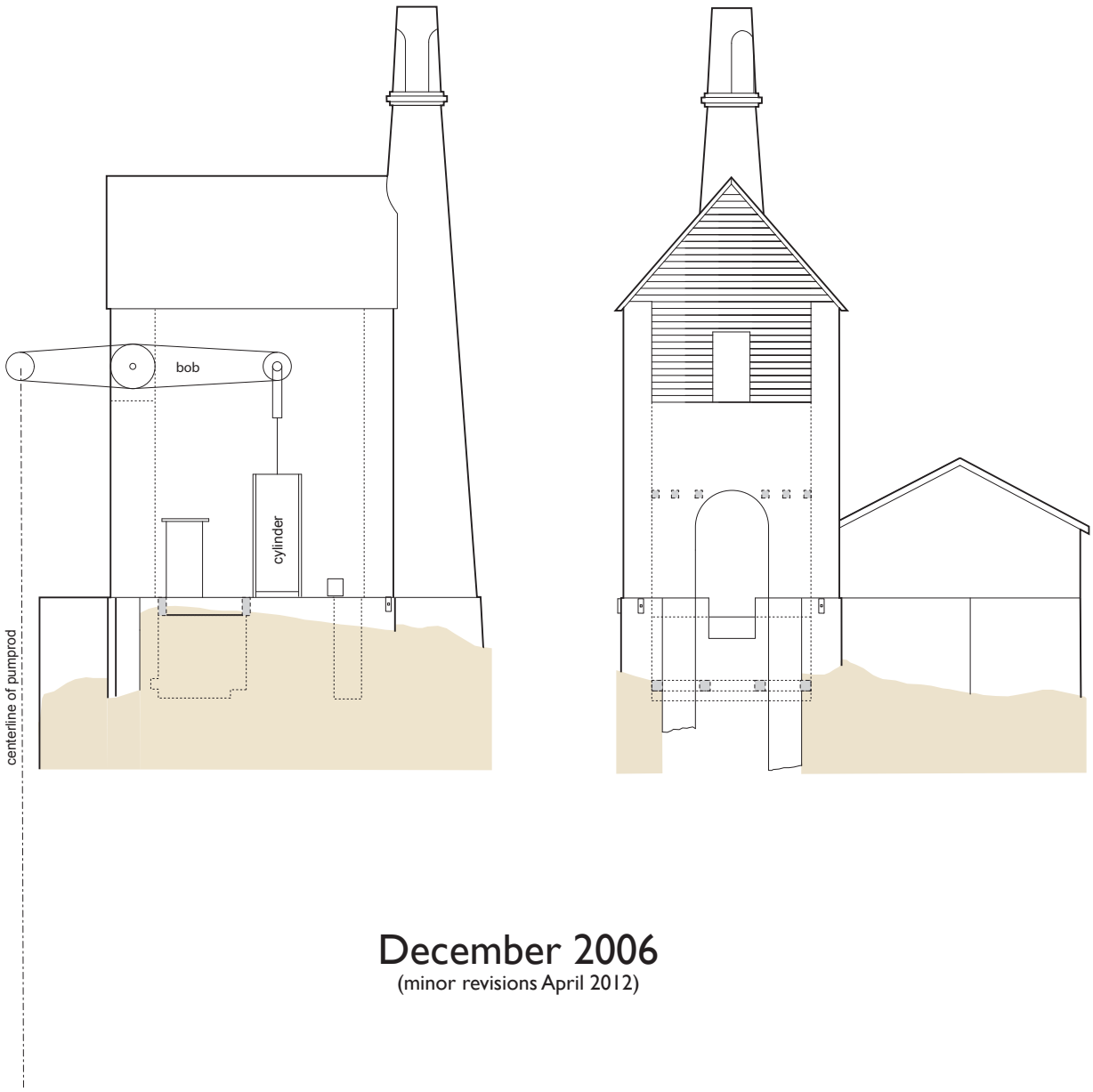

December 2006
(minor revisions April 2012)

South-West Landscape Investigations

Dr Phil Newman MIFA, FSA

The Engine House and Wheel House at Brookwood Mine, Buckfastleigh, Devon:

a survey of the standing structures

Dr Phil Newman MCIfA, FSA
Southwest Landscape Investigations
WWW:philnew.co.uk

December 2006
(minor revisions April 2012)

Introduction

In 2005 a survey of the mining surface evidence carried out by English Heritage, within the grounds of Brook Manor, identified the remains of several partially ruined buildings (Newman 2005). These are: a total of six wheelpits; one wheel house; one winding or 'whim' engine house; one pumping engine house; three ancillary buildings; plus other fragments of badly ruined structures.

Of these structures, the whim engine house, which remains as a stump, one wheelpit and two other buildings were recorded in plan view at large scale as part of the EH survey. Three other large wheelpits were considered too ruinous for detailed recording to be worthwhile and the largest wheelpit remains in a robust condition, currently not under any major threat.

The pumping engine house and the wheel house however, although surviving in part as standing structures, are in an accelerated state of decay. The fragile remains are in an unstable and dangerous condition which is likely to get much worse. It is to be hoped that conservation work to stabilise the buildings could take place to prevent further collapse, but this is unlikely in the short term. In the meantime, enough of the fabric remains to enable interpretation and reconstruction to a reasonable level of confidence so that some record of their appearance survives even if the structures ultimately do not.

The Survey

Both buildings are in a very fragile condition with walls in an active state of decay. For health and safety reasons it was not possible to use ladders, either inside or outside the buildings, to take accurate measurements at the higher levels, for fear of disturbing the walls further. It was also not possible to get close to parts of the engine house directly above the open mine shaft. An additional problem is that both buildings are thickly covered by vegetation, especially ivy and bramble, which is disguising a lot of the evidence, particularly on the upper levels of the ruined walls and chimney, where measurement is difficult.

The footprint and levels of the buildings were established using a Total Station Theodolite. For some detail of the above ground masonry the instrument was set to reflectorless mode. Having established a basic 3-dimensional outline for the buildings, additional detail was recorded using tape measures. The limitations of this technique, dictated by the conditions at the site, have meant that some inaccessible, vegetation-covered sections of the walls could not be measured with the same level of precision as the lower sections. For this reason the survey is not intended to be a comprehensive statement on the condition or extent of surviving fabric. However, enough diagnostic elements were surveyed to provide the information needed for illustrations of the present appearance and to interpret what remains.

Both buildings are constructed from carboniferous shale, referred to locally as killas, the source of which is likely to be a small quarry within the Brook Manor estate, 220m SSW of the engine house. This material comes mostly in insubstantial pieces which were bonded together with a crumbly lime mortar. Window and door lintels were of timber, the majority of which, together with other timber components, have rotted. The combination of these non durable materials, and, in the case of the engine house, the apparent robbing of brickwork from door and window surrounds, has resulted in them suffering serious collapse, especially since the decay of the timber components.

Figure 1. The southern wing wall showing entrance and window openings.

The Engine House

This building sits adjacent to and on the west side of the engine shaft, in which it powered pumps or 'pitwork', used to remove water from the bottom of the mine. The engine house is oriented SW - NE, the shaft being on the north eastern side. The partly-fallen chimney stack adjoins the western end wall, sited unusually in the centre of the wall. A badly-ruined boiler house, of two chambers is attached to the north wing wall.

No documentary research has taken place in connection with this survey but it is known that this engine house was built in 1868 while the sett was under the management of Brookwood Mine (Hamilton Jenkin 1981, 96). Unfortunately the manufacturer of the engine has not yet come to light, but may do with further research. It seems likely to have continued in use after this sett was combined with Wheal Emma in 1878 to form South Devon United Copper Mines and may have remained working until the final closure in 1885.

No previous measured survey has been published although Nance and Nance (1996) prepared a sketch plan of both engine houses at Brookwood. An unpublished report by Bick (1982) commissioned in support of the English Heritage Monument Protection Programme dismisses the site doubting if it is 'out of the ordinary', though this comment suggests that its the author's visit to the site was brief.

Description

As with most beam engine houses the walls rest on a partially buried foundation plinth forming the structure of the cockpit or cataract pit, into which is built the cylinder loading, level with the top of the plinth. In the following description, the 0.08m corbel, formed by the top of the plinth and the main structure above, serves as a datum line from which all vertical dimensions have been measured. The plinth itself has an external footprint of 8.6m

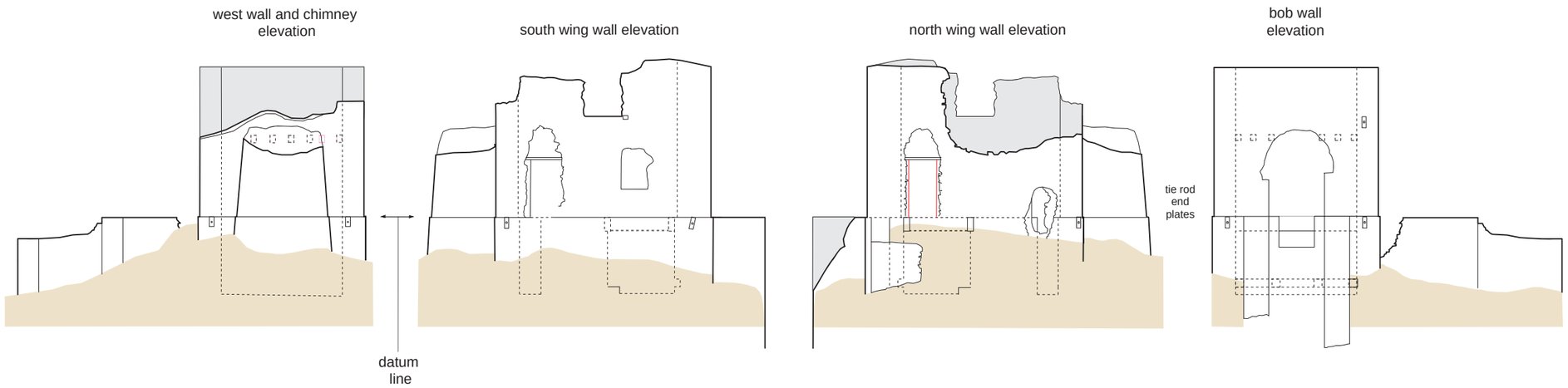

Figure. 2

Brookwood Mine Pumping Engine House

Condition of standing walls

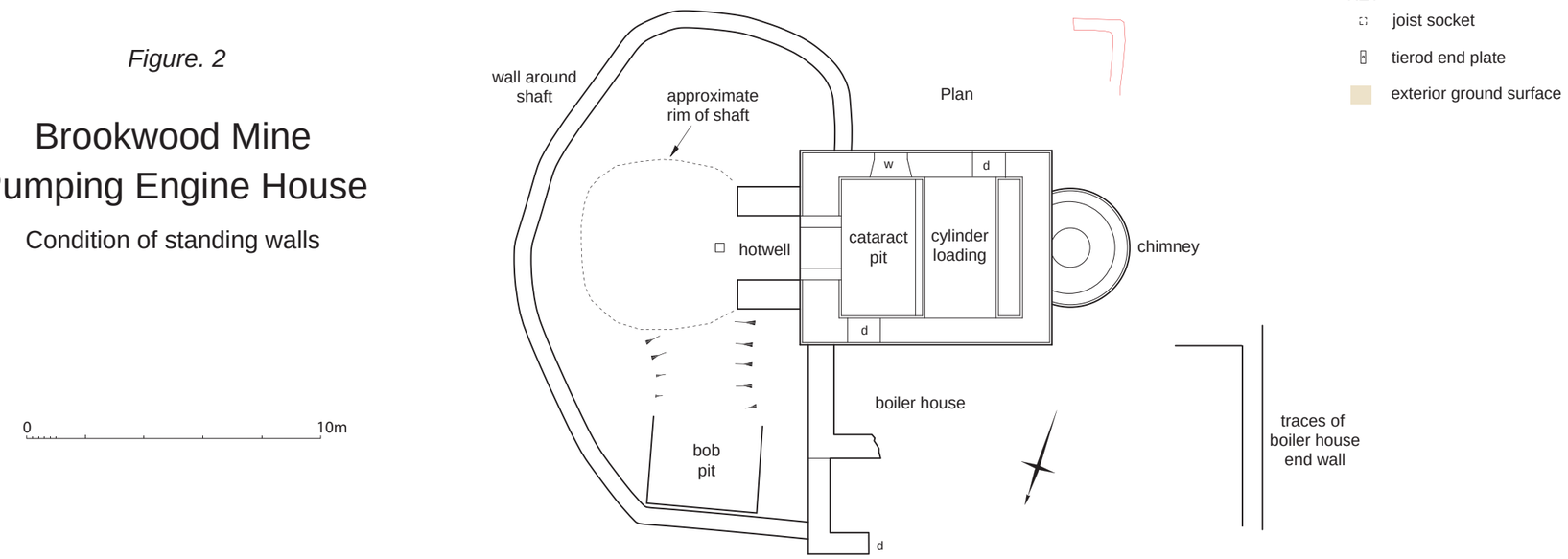

Figure 3. View from the east showing the bob wall.

by 6.6m, with wing walls and a back wall of 1m thick. The cylinder loading, which is set 0.9m from the back wall, takes up the entire breadth of the interior and is 2.6m wide, leaving the cataract pit between it and the bob wall of 2.75m wide. The pit is approximately 3m deep, though partially filled with rubble and humus, which probably represents the total depth of the plinth. Both the cataract pit and the narrow channel between the cylinder loading and the back wall, would have been floored, or partly floored, with either timber planks or cast iron grates, supported by the narrow ledge which defines the edges of all these internal features along the top of the plinth. Joist socket holes level with the top edge of the cataract pit on the side walls of the plinth, indicate additional timber supports for a floor. Near the bottom of the pit on the west side is a 0.24m wide ledge running the width of the building. Four corresponding joist socket holes in the bob wall plinth suggest that the bottom of the pit had a raised floor. The plinth was reinforced by two iron tie rods, for each axis of the building. Seven end plates, consisting of corroded iron rectangles 0.15m by 0.45m with tightening nuts survive in place. It is likely that a further set of tie rods strengthened the upper section of the building but some were displaced when the walls collapsed, and others are covered by ivy. However, one remains exposed on the bob wall.

Although the cylinder loading is buried by material fallen from the walls above, two large *in-situ* granite blocks, just visible beneath the debris are certainly the front upper surface of the bedstones onto which the cylinder was bolted. The hold-down bolts are currently buried by debris and could not be measured.

Of all the surviving walls, only the bob wall, which supported the beam or 'bob', on the eastern end adjacent to the shaft, appears to be standing to its original height of 5.8m. However, this is by no means certain, as due to its inaccessibility and ivy covering, it was not possible to inspect the upper section of stonework. Nevertheless, the top surface of

Figure 4. The northern wing wall showing the entrance on the left and the probable steam inlet opening on the right. The ruined boiler house is in foreground (January 2005)

the wall remains in a level, straight line and is approximately the height to be expected of a bob wall. All the other walls of the engine house would have originally been taller than this wall, but all have been shortened by collapse or demolition. The bob wall is 1.3m (4ft 3in) thick and has a central plug door which, where the stonework is intact, is 2.2m (86 in) wide, above the corbel and 1.4m wide below with a total height of approximately 4.4m. The opening currently has a roughly arched top profile though much material has fallen away from the top and sides. It has to be assumed that the top of this arch was lined with brick which has been totally robbed out or fallen away. An alternative arrangement would have been a square top to the door, but this would have required a massive timber lintel to support the weight of the wall and the beam above leaving a substantial linear recess in the wall for which there is no evidence. This plug door is particularly wide because it also served as a cylinder opening, as access through the rear wall of the building was not possible due of the positioning of the chimney.

On the eastern exterior of the bob wall, directly adjacent to the shaft, are the two protruding walls of the hotwell, between which the condenser and condenser cistern would have been contained. The top of these walls is level with the top of the plinth and they extend 2m towards the shaft. The distance between them is 2.18m. The original depth of the hotwell cannot be determined as it is now full of rubble, but the front edges of the walls extend down into the shaft. The southern of the two sides is intact but for the odd absent stone, though that on the north side is missing a substantial section of masonry.

The engine house is likely originally to have had three floors, including the ground floor onto which the cylinder was bolted. Evidence of the first floor is visible as lines of joist sockets 3m above the ground floor on the bob wall and back wall. A second floor would have existed at approximately the level of the top of the bob wall to give access to the beam. Sadly no evidence for the upper floor survives but it is likely that the wing and back

Figure 5. The hot well and top of shaft.

walls extended at least another 3m above the top of the bob wall and that an apex roof would have sat upon that (see reconstruction drawings Figure 10). The remaining unwalled upper section of the bob wall would have been constructed from timber with a planked exterior containing an opening for the beam. The position of internal staircases has to be guessed although the absence of joist sockets where one would be expected in the corners of the first floor on the back wall offers possible positions for them.

The building has two door openings, one on each of the wing walls, set near opposite corners, with the thresholds sitting on the top of the plinth. The current openings suggest the doors were approximately 0.6m wide by 2.2m high, with timber lintels defining the tops; that on the south side survives in place. The doorways were once lined with brick though this is now missing, likely to have been robbed. Exterior steps, probably built from timber, would have been needed to enter the building. Two window openings survive in the south wall. That on the ground floor, set towards the eastern end, has angled reveals with brickwork lining surviving in places. Vestiges of a recess in the wall indicate the position of a now missing timber lintel, although some masonry from above the window has fallen away. The window opening measures approximately 1m wide by 1.1m high. A more ruinous opening survives on the first floor, set centrally into the wall. The top of the opening is missing but it was probably of similar dimensions to that below it. The window configuration on the north wing wall is uncertain although none were present on the ground floor. A centrally positioned window on the first floor, similar to that on the south side is likely, and it is almost certain that at least one window, existed on the upper storey, probably also positioned centrally.

The chimney stack is built against the exterior of the western wall, giving it a 'C' shaped arced footprint with a base diameter of 4m. The taper is 4° off vertical. It is positioned centrally between the two corners of the building, and takes up sufficient space for there

Figure 6. Interior view of the southern doorway, with lintel in situ.

to have been no room for a cylinder opening which is the feature normally located in this wall. This is an unusual layout which would have meant the installation of the cylinder, during construction, and its subsequent removal during decommissioning, would have had to have been via the enlarged plug door in the bob wall and across the open shaft. The original height and appearance of the chimney can only be estimated on the basis of the measurable components and by comparison with others in the district. It is likely to have been approximately 18m high (above the corbel line) and probably had a brick top section (see reconstruction Figure 10).

The twin-chambered boiler house is the most ruined part of the building. Only the eastern end with its corner detail still stands, and it is likely that much masonry has been robbed as little of the remainder of the building is visible. Also, much of the masonry from the badly collapsed north wing wall of the engine house has fallen into to the boiler house, filling it with rubble. Fortunately some faint traces of the west end of the boiler house survive and the precise ground plan can be determined. As is common with pumping engines, there were two boilers, almost certainly of Cornish pattern. It is likely that the outer boiler and its containing structure were a later addition as the surviving eastern wall has evidence of two building phases. A short stub wall marks the original outside of the first, inner, chamber, but there is no

Figure 7. The base of the chimney.

Figure 8. The boiler house end wall, showing two phases of construction.

certainty that rest of this wall was left standing when the second chamber was added. The internal length of both chambers was 14.5m. The inner chamber was 3m wide and the outer later addition was 2.5m. Part of the *in situ* east end wall is probably still standing to its original height, which would put the top of the wall approximately level with the plinth corbel on the main engine house. The squared end of the outer chamber stub wall masonry suggests this was the position of a doorway.

The configuration of the roof covering the boiler house is not easily established from the evidence. A plan of the mine dated 1875 (CRO HB/81) shows the two chambers in place with a single ridged roof covering both. However, to allow for the entrance from the engine house into the boiler house, which is higher than the remaining boiler house wall, such a roof would have needed to have its support rail over 2m above the current maximum height of the boiler house wall. In this case a raised timber frame structure, clad with either weather board or galvanized sheeting would have been needed for the roof timbers to rest on. An alternative and probably more likely arrangement might have been that part of the inner chamber had a sloping roof (see Fig 10). However, there is no evidence of fixings on the exterior of the north wall of the engine house, which would have been needed to support either of these possibilities.

An opening in the base of the north wall, near the west corner, of the engine house, is likely to be the inlet for the steam pipe from the boilers to the cylinder. The opening straddles the plinth and the main wall and has been much enlarged as a result of stone falling away.

Interpretation

Figure 10 is an interpretation based on dimensions and detail resulting from the survey. To establish the wall heights it has been assumed that the bob wall remains to its original

Figure 9. The stone lined bob pit.

height and that a second floor would have existed at that level. The position of the first floor can be established from the existence of joist sockets in the bob wall and back wall.

According to Hamilton Jenkin (1981, 96) this building contained a 50-inch (1.27m) diameter cylinder. This would accord comfortably with the recorded dimensions of the building, using the formula published by Brown *et al* (2005), calculated on the basis of bob wall thickness and cylinder door size (*see* Appendix 1a and 1b). Unfortunately, although the bedstone survives *in situ*, the positions of the hold down bolts cannot be recorded as they are covered in debris. Removal of this debris followed by measurement of these bolt positions would provide the most accurate confirmation of cylinder size. The height of the cylinder is harder to estimate but it was normal for the top to protrude a short distance through the floor above. The top floor needed enough internal space to contain the rocking motion of the beam and the parallel motion mechanism. The ridge roof was the most common type for engine houses and in this case this is confirmed by the 1875 plan. This may have been covered with slate.

It has also been possible to estimate the outdoor half beam length to be approximately 3.3m. This has been achieved by projecting the axis of the balance bob, located in the skewed bob pit on the north side of the building to reveal the original vertical position of the pump rod, then measuring from this point to the centre of the bob wall. The indoor half beam length cannot be calculated with precision because the hold down bolts for the cylinder are not visible. However, it seems likely that this measurement was slightly greater than the outdoor measurement.

Although the window positions survive on the lower floors of the south wall, those on the north wall and the upper storeys are based on what is typical on engine houses elsewhere.

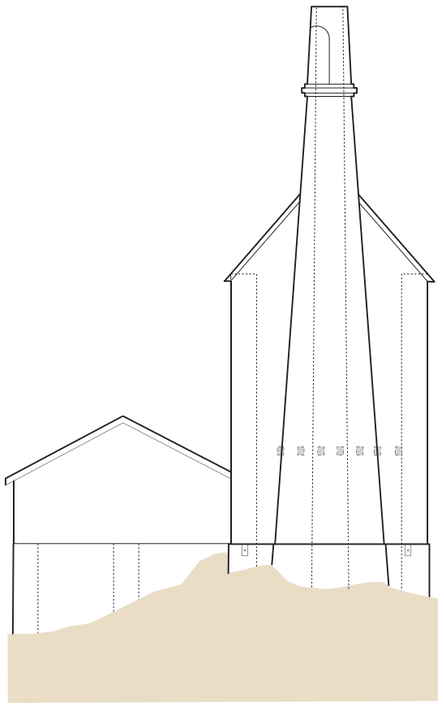

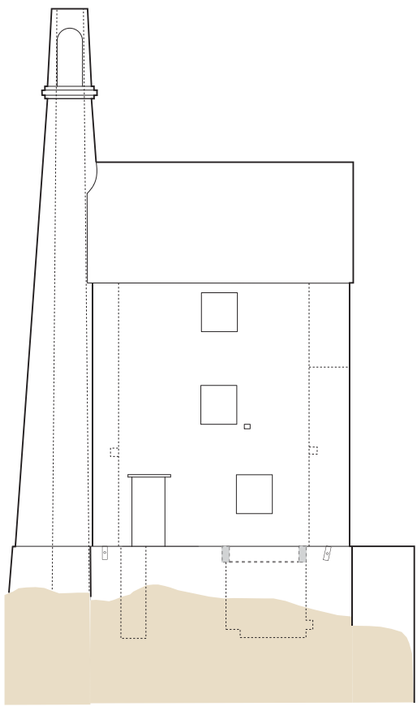

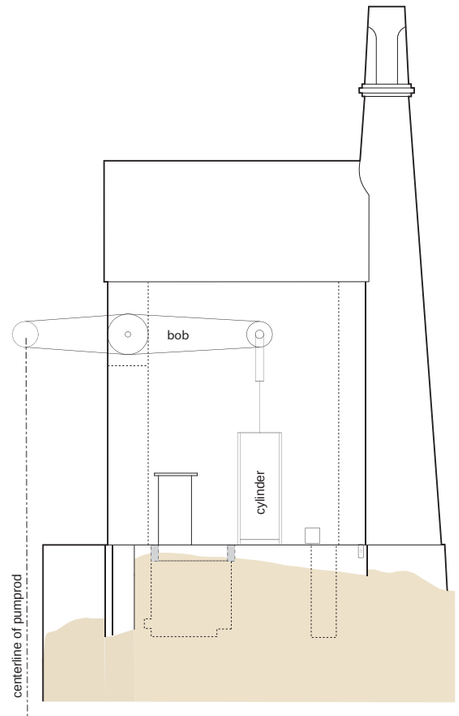

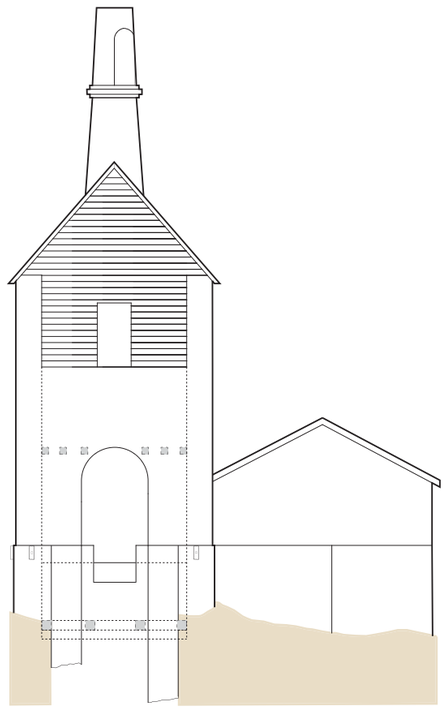

Figure 10

Brookwood Mine Pumping Engine House

Reconstruction of walls
and suggested external appearance

0 10m

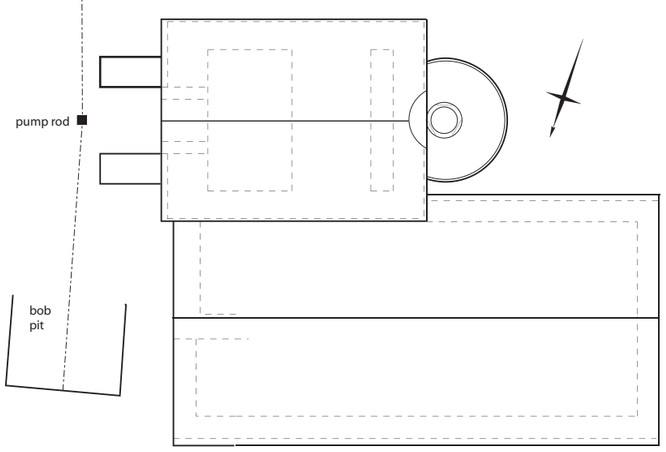

Side elevation
and plan showing
boiler house and roof
detail

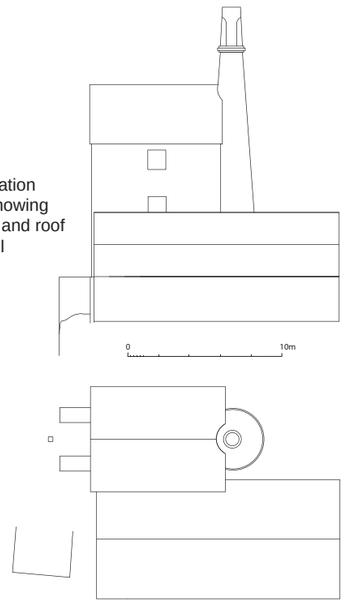

Figure 11. The shaft opening with timber pump rod in situ.

The chimney height and diameter have been calculated by projecting the remaining stump. The top section of the chimney would most likely have been built from brick. Without a photograph it is impossible to state its precise appearance. However, a common design in this district used a protruding brick collar, known as a drip ring at the upper terminal of the stonework. Surviving examples may be seen at Silverbrook Mine in Ilsington and Arundel Mine in Ashburton. Indeed the whim engine at Brookwood, only 45m to the south east which is now almost completely collapsed has fragments of a fallen example of a drip ring lying to the north of its boiler house. The use of blind arches decorating the circumference of the brickwork is also a popular embellishment used and survives at Bottle Hill Mine near Plympton and Arundell Mine.

Although the ground plan of the boiler house can be drawn with a degree of certainty, the layout of its roof is not so straightforward. The map of 1875 shows a single ridged roof covering both chambers. As referred to above this would have needed to be raised above the existing boiler house walls by some sort of timber structure for the door on the side of the engine house to give access to the interior of the boiler house via a flight of wooden steps but still be under cover, ie indoors. The alternative partially sloping configuration has been used on the reconstruction, of which examples are known elsewhere, as at Parkandillick in Cornwall.

The wheel house

This building sits to the south east of the pumping engine house. Its position at the upper area of the Brookwood Mine dressing floors strongly suggests that the waterwheel housed within it powered a either a crushing mill or a hauling device (whim) in Martin's Shaft.

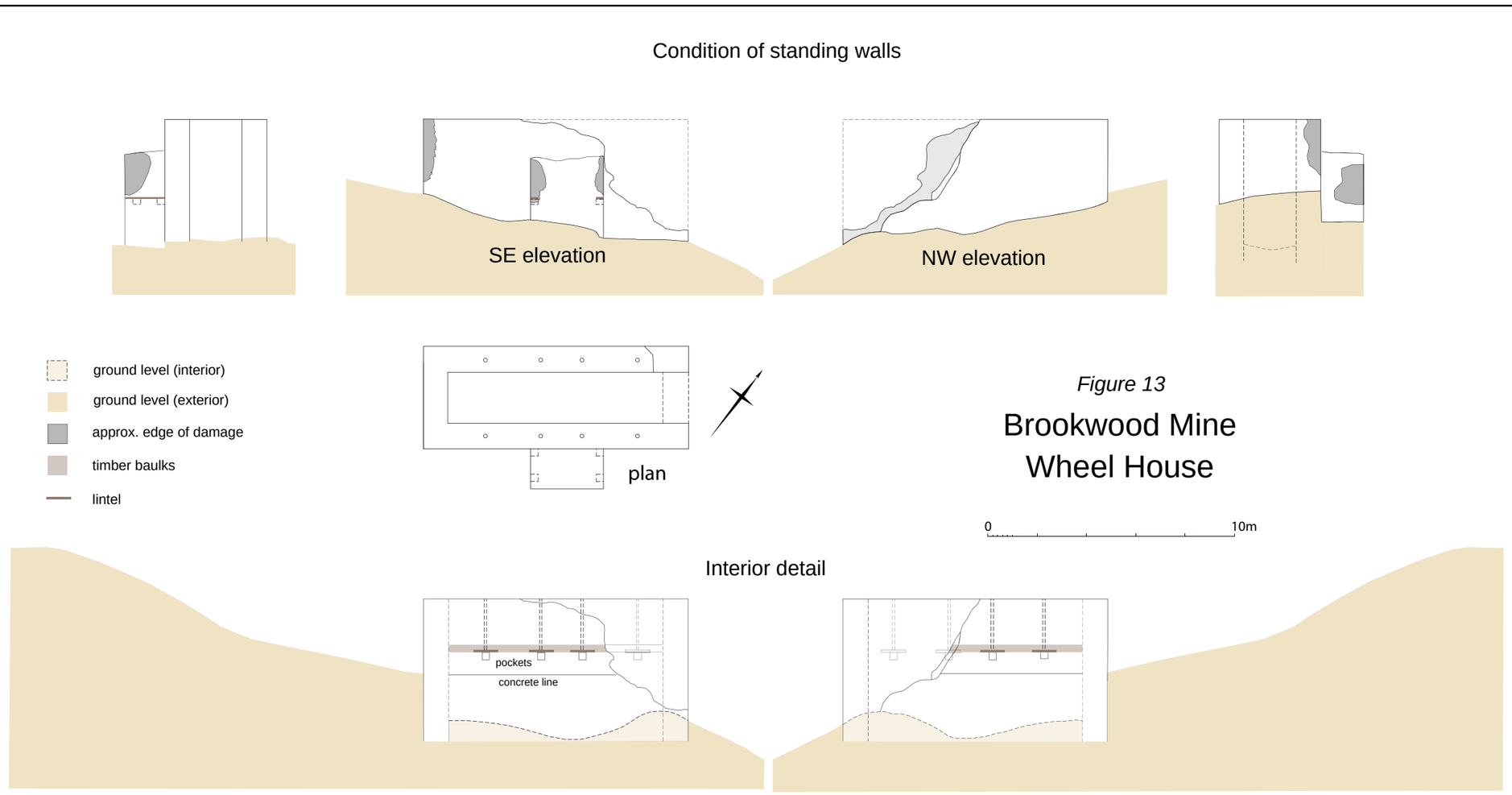

Figure 13

Brookwood Mine
Wheel House

Figure 12. The wheel house viewed from the north showing the collapsed section and open end. The butress stands behind the figure. April 2005.

The wheel house is located on a gentle slope and all walls project above the ground, hence the term wheel house is used in preference to wheel pit. The narrow south wall appears to remain to its full original height as do the adjoining sections of the long side walls. However, both side walls have collapsed at the northern end and it is not clear if a northern end wall ever existed as there is no trace of it remaining. It is not unusual for a wheel house to have an open lower end.

The walls are 0.95m thick and the internal dimensions of the wheel house are 2.2m wide by 9.7m (31.8ft). Although the interior is strewn with tumbled stone the maximum internal height is 5.7m. Attached to the SE exterior is a solidly built stone buttress measuring 2m by 1.6m. Its original height is uncertain because of disturbance on the upper surface but it appears unlikely to have stood much higher than it currently does, leaving a distance between its upper surface and the top of the wheel house of approximately 1.5m.

The fixtures and bearings which supported the wheel were bolted to large baulks of timber running along the top of the long walls of the wheel house, though these do not survive. This timber was in turn secured to the wall by long iron bars running vertically inside linear cavities within the wall. One of these cavities is visible where the stone has fallen away (Figure 15). Open pockets or niches, were used to give access to the lower end of the bars. Three of these pockets are visible on the east wall and two on the west, *c*.2m down from the top of the wall. Each pocket is 0.30m square and recessed into the wall approximately 0.45m. Baulks of timber 0.15m by 0.3m are laced into the fabric of the walls, running the full length of the structure along the top of the recessed pockets and it was against this timber that the iron bars were tensioned either with threaded nuts or with iron wedges forced through slots in the bars. The timber survives and is exposed in the pockets and at the north end of the wall where collapsed. The exposed face of each

Figure 14. Reccessed pocket on wheel house interior. Lintel still in place.

pocket also has a narrow timber lintel above. The buttress structure on the exterior also has similar recessed pockets and timber lacing on the narrow end walls which provides evidence that machinery was fixed to the upper surface of the buttress.

On the interior walls of the structure a level line of cement runs along both sides and the surviving end, approximately 1.5m from the top surface. This appears to represent evidence of a fixture, probably of timber, having existed within the same space as the waterwheel. What purpose this served is uncertain.

No leat channel is associated with this wheel house, but water was diverted to it via a raised wooden race from the Wheal Emma leat, as described in the 2005 English Heritage report.

Interpretation

The precise diameter of the waterwheel is not known, and cannot be calculated with certainty. Within the confines of the structure, a 28ft (10m) wheel would have fitted comfortably although the depth of the walls suggest a larger wheel could have been accommodated. This would assume that the NE end of the structure was indeed open as implied by the remains, and that the arc of the wheel extended beyond the limits of the sides. However, under this scheme the axle would have been further forward than is likely. If the end was filled then a much smaller wheel would have been installed, but then the depth of the structure makes this unlikely.

The purpose of this waterwheel has not yet been identified from documentation but it is highly likely to have powered either a set of crushing rollers or hoisting equipment both of which could have been supported or partly supported by the structure attached to

Figure 15. Reccessed pocket partly fallen away showing vertical cavity for iron fixtures and horizontal timber lacing.

the south east side of the wheel house. It needs to be noted however, that crushers of this type in the westcountry were usually built into substantial covered stone buildings such as that at Silverbrook Mine, powered by a steam engine, and at Arundell mine which has a 60ft wheelpit attached. Nevertheless, examples elsewhere such as that at the Yorkshire Dales Lead Mining Museum at Earby, did not have such a structure. A further possibility is that the waterwheel powered hauling gear in Martin's shaft, before the installation of the steam whim engine.

Conservation

As has been discussed above, the condition of these two buildings is fragile. The non-enduring construction techniques, together with dereliction and the inevitable forces of attrition have combined to reduce the structures to their current perilous state. In the winter of 2004-5 a programme of tree felling was undertaken to remove large trees which were threatening the structures, either by growing close to them, or in some cases having roots within the fabric. While the threat from these trees has now been lessened, the removal of the tree canopy has increased the available light in the vicinity of the buildings and this in turn has allowed many shrubs, ferns and brambles to establish on the walls and for the existing ivy to flourish. If unchecked, this will certainly accelerate the demise of the structures in the future. See Figures 4, 16 and 12, 17 for comparisons.

Figure 16. The northern wing wall of the engine house in August 2006 after just one season following clearance work. Compare with Figure 4. Already the ivy growth has accelerated and small shrubs and brambles are becoming established in the walls, taking advantage of the additional light.

Figure 17. The wheel house August 2006. Showing accelerated growth of vegetation since clearance. Compare with Figure 12.

Appendix a (i)
Cylinder diameter calculated from bob wall thickness

Cylinder diameter = 29 + (bob wall thickness x 0.547)

29 + (51 x 0.547) = 56 inches

Appendix a (ii)
Cylinder diameter calculated from cylinder doorway opening dimensions

Required doorway width = 1.5 x cylinder diameter + *c*.3"

1.5 x 50 + 3 = 78 inches

actual doorway width = 86

References

Brown, K, *et al* 2005 *Interpreting the Ruins of Cornish Engine Houses*. (Europamines)

Bick, D 1982 *The Beam Engine House at Mines in England* (excluding Cornwall) [unpublished typescript]

Hamilton Jenkin, A K 1981 *The Mines of Devon, North and East of Dartmoor* (Devon Library Services)

Nance, R D & Nance R D 1996 'A Survey of Engine Houses on the Mines of South Devon' *Mining History* **13.2**,109-22

Newman, P 2005 *Brookwood and Wheal Emma Copper Mines, Buckfastleigh, Devon: An Archaeological Survey* (EH Report Series AI/01/2005)